SERIE PP

Miniature inductive proximity sensors 5x5mm - DC

- **Extremely reduced dimensions**
- **Metal housing**
- **Axial cable exit**
- **LED status indicator**
- **IP67 protection degree**
- **Complete protection against electrical damages**

DIMENSIONAL DRAWING

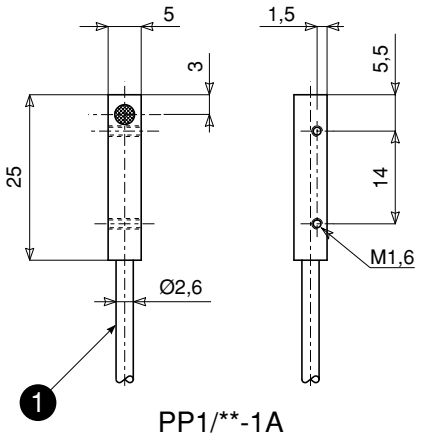

Key

1	Cable 3x0,055mm², Ø2,6mm, PUR, 2m

CHARACTERISTIC CURVES

Detection area

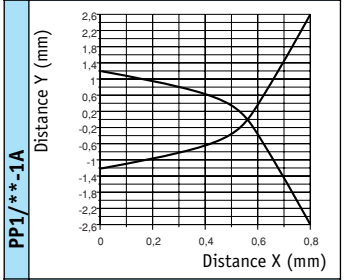

Distance / target size

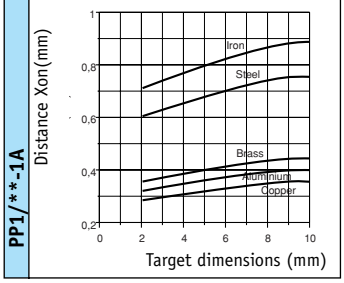

ORDERING SYSTEM

P P 1 / A N - 1 A

serie		cable exit	
miniature inductive proximity sensors	PP1	A	axial cable exit
output state		sensing range	
NO output state	A	1	standard shielded 0,8mm
NC output state	C	logic	
		N	NPN output
		P	PNP output

SPECIFICATIONS

Model	PP1/**-1A
Nominal sensing distance Sn (1)	0,8mm
Operating distance	0...0,65mm (shielded)
Differential travel	10% Typ
Repeat accuracy	1,5%
Operating voltage	10-30Vdc
Ripple	≤ 20%
No-load supply current	10mA
Load current	≤ 200mA
Leakage current	≤ 10µA
Voltage drop	2V max. I_L=200mA
Output type	NPN or PNP NO or NC
Switching frequency	5KHz
Time delay before availability	10ms
Supply electrical protections	polarity reversal, transient
Output electrical protections	short circuit (autoreset)
Temperature range	-25°...+70°C
Temperature drift	10% Sr
Protection degree (DIN 40 050)	IEC IP67
LED indicators	-
Housing material	nickel-plated brass
Sensing face material	PBT
Tightening torque	-
Weight (approx.)	43g

(1) with 5x5mm FE360 target.

WIRING DIAGRAMS

NPN output

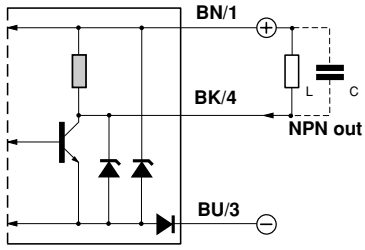

PNP output

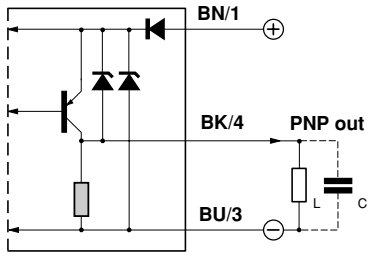

The max. admissible capacity C = 100nF for max. output voltage and current.